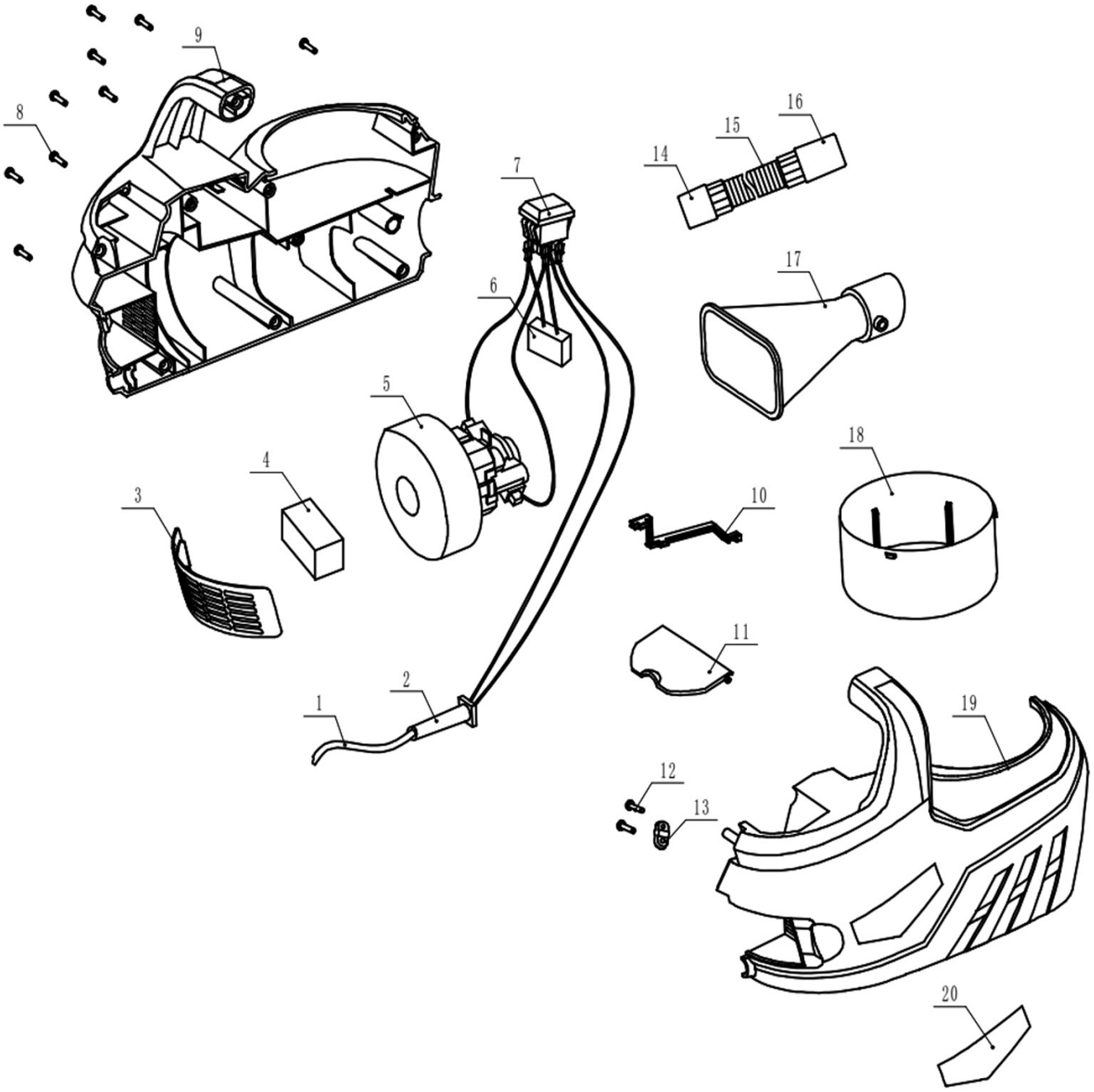
9
8
16
15
14
7
17
6
5
18
4
3
10
11
2
1
19
12
13
20

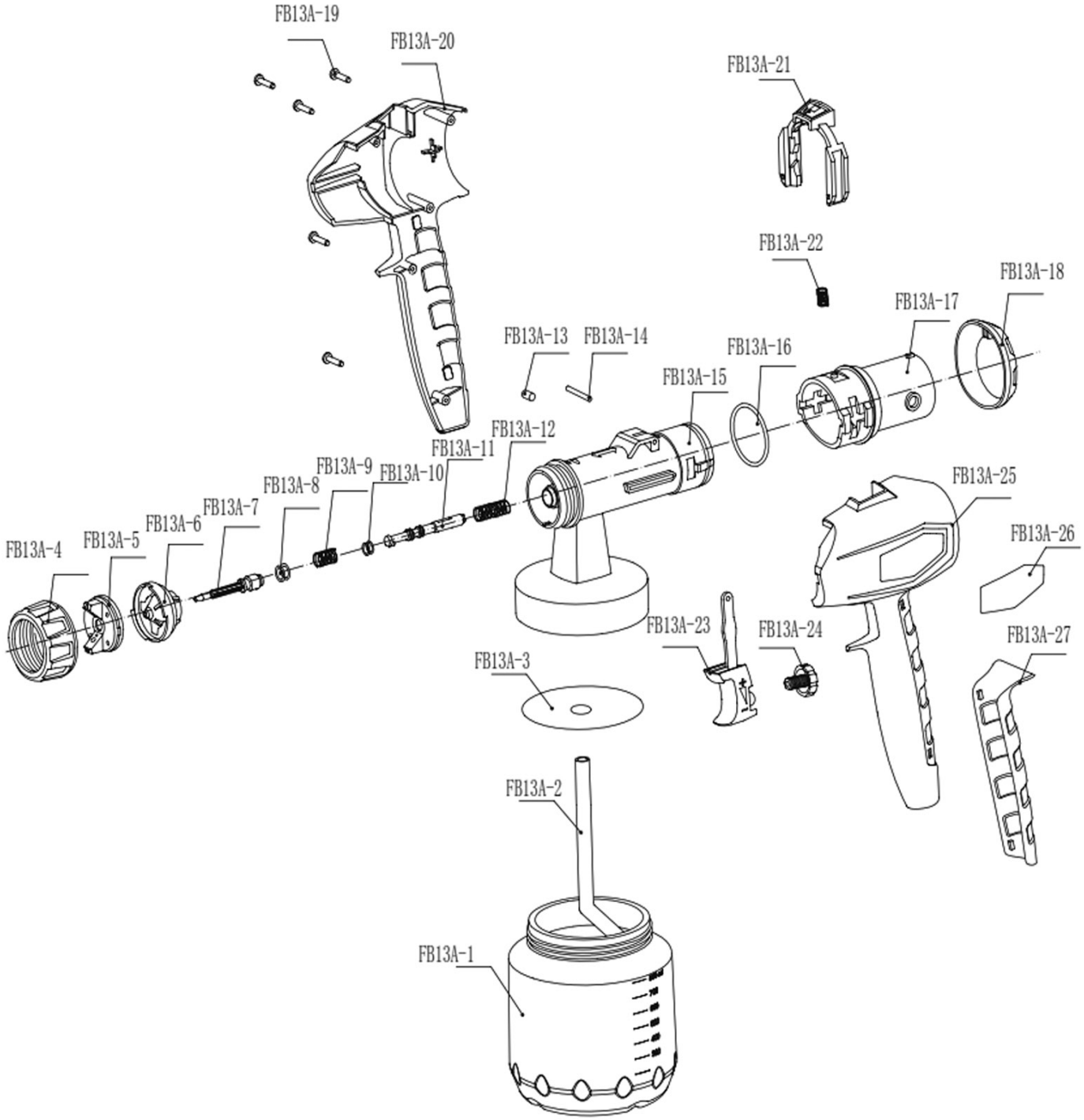
FB13A-19
FB13A-20
FB13A-21
FB13A-22
FB13A-18
FB13A-17
FB13A-13
FB13A-14
FB13A-16
FB13A-15
FB13A-12
FB13A-11
FB13A-9
FB13A-10
FB13A-8
FB13A-7
FB13A-6
FB13A-5
FB13A-4
FB13A-25
FB13A-26
FB13A-23
FB13A-24
FB13A-27
FB13A-3
FB13A-2
FB13A-1